Product Data Sheet

Zambelis LIGHTS

Code E507

Color: Stainless Steel

Date: 10/11/2025

Zambelis Lights

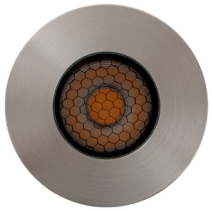

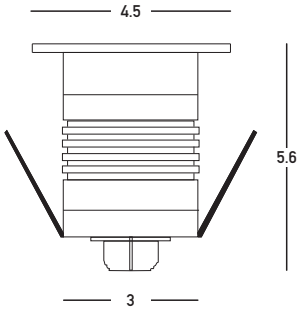

Physical Specifications

Luminaire Type	Inground Lights with Honeycomb
Color	Stainless Steel
Material	Aluminium - Stainless Steel - Tempered Glass
IP	67
IK	8
Installation	Recessed
Warranty	3 Years

Dimensions Reference

Overall Dimensions	Ø: 4.5cm H: 5.6cm
Cable & Wires	None
Depth Required	7.5cm
Recessed Mounting Box	Ø: 4.4cm H: 7.5cm (Aluminium)

Illumination Data

Color Temperature	2700K
Cri	80
Lumen Output	218Lm
Beam Angle	10°
UGR	N/A
Energy Efficiency Class	G
Indicative Lifetime	L70B50 30000H
Mc Adam	SDCM<0.9

Electrical Specifications

Input Voltage	24V
Power	3W
Light Source	LED built in
Dimming Options	Optional
Recommended Driver	LPH-18-24 (On-Off)(Not Included)
Connection	In Parallel Connection 1-5pcs
Safety Class	I

Packing Info

Package Size	L: 8cm W: 8cm H: 8cm
Gross Weight	0.3kg

Product Description

Outdoor Inground Recessed LED Light 3W 24V 2700K Aluminium Stainless Steel Tempered Glass With Honeycomb IP67

LED IP67 30K HOURS CRi80 DIMMABLE IK08

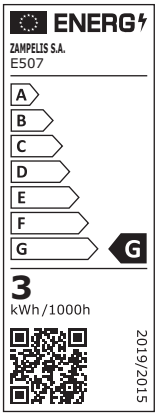

www.zambelislights.gr | info@zambelislights.gr

5 212031 024145

3 YEARS WARRANTY

Greece , Attica , Keratea , Kivouri | Postal Code: 19001 | P.O. Box: 4791
Tel.: (+30) 22990 63518-19 | Fax: (+30) 22990 63521

ANDROID APP ON Google play

Available on the iPhone App Store